DRG. No. 3GA-1539

SDC 13.59 PLATFORM SKELETAL LAYOUT & TECHNICAL INFORMATION SHEET

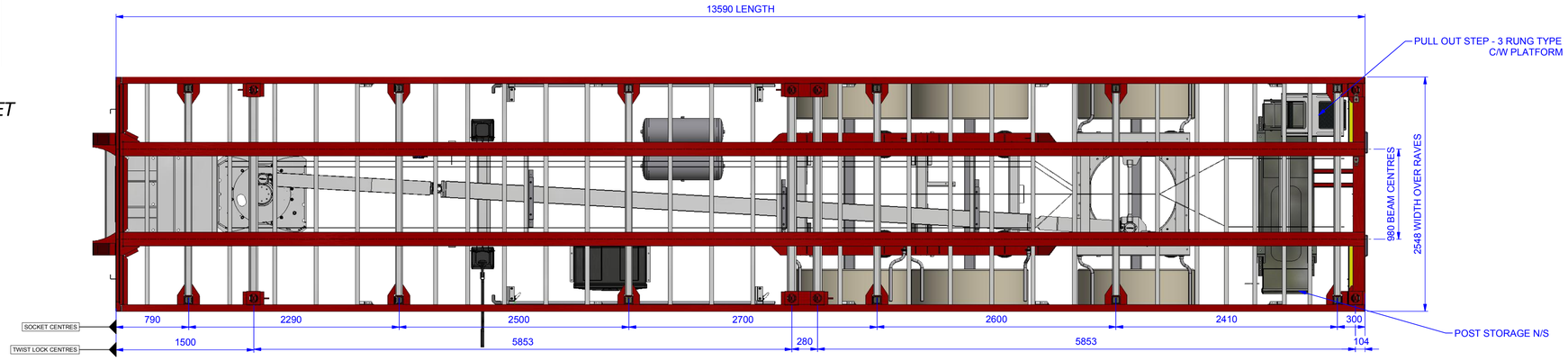

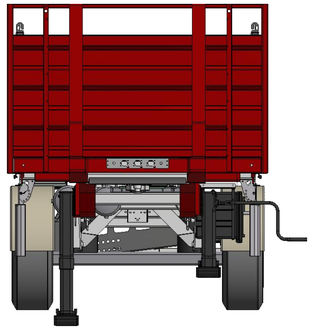

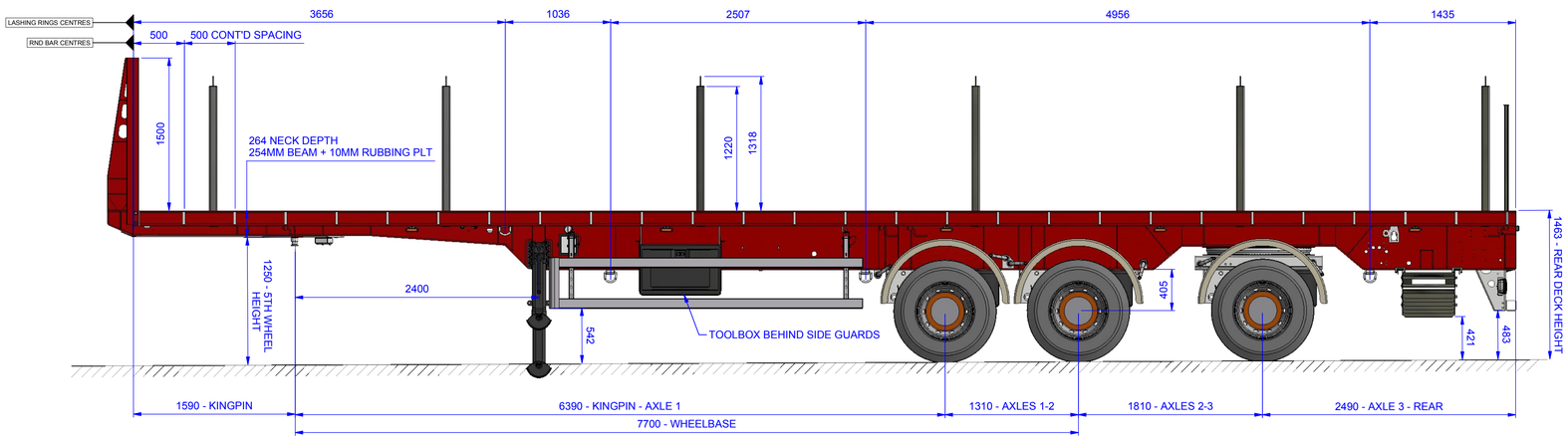

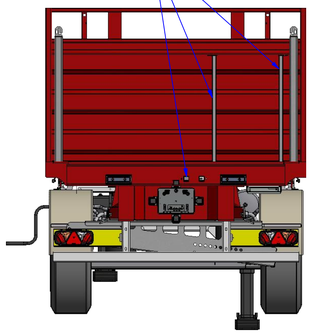

Detail M (1 : 5)

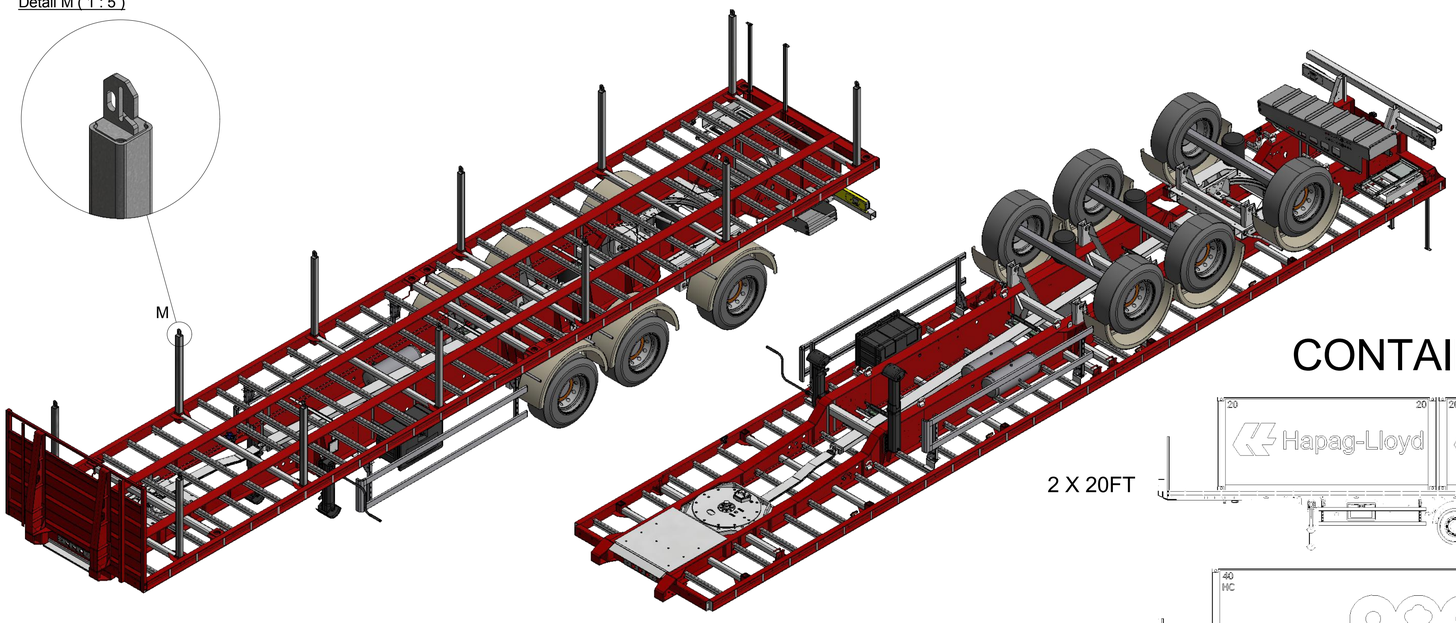

CONTAINERS

2 X 20FT

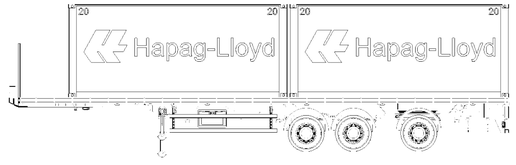

1 X 40FT

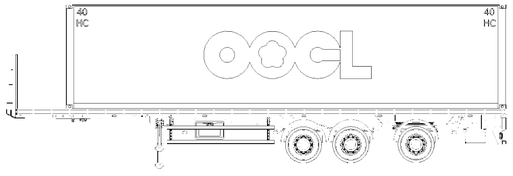

Technical Information	
Attribute	Data
Layout ID	3GA-1539
Chassis	3CF-1981
Neck Depth	264mm
Length	13590mm
Width	2548mm
Wheelbase	7700mm
Kingpin - Front	1590mm
Fifth Wheel Height	1250mm
Axles/Suspension	BPW ALM/ALM Suspension
Rear Steer	TRIDEC
Tyre-Wheel Combination	385/55 X R22.5 - 11.75 X R22.5
Beam Bottom Flange	150mm X 15mm
Side Rave	PFC 150x75
Floor Setdown Distance	28mm
Floor Crossmember Nominal Pitch	450mm
Twistlock Quantities	8
Suits Container Sizes	1 x 40Ft, 2 x 20Ft
Sockets	6 Pair
Socket Depth - Orientation	1220mm Above Floor
Chassis Lashing Rings	4 Pair
Deck Lashing Rings	None
Step/3 Points Contact Grab Handles	3 Rung C/W Platform / 2
Buffers	2 x STD 90mm
Storages	JBX80 Toolbox, Storage FOR 12 Posts
Headboard Type (Standard, ENXL, Bespoke)	ENXL
Miscellaneous information	

REV	DESCRIPTION	RAISED BY	DATE

SDC TRAILERS LTD.
116 DEERPARK ROAD
TOOMEBRIDGE, CO. ANTRIM, N. IRELAND
TELEPHONE (028)79.656755 FAX NO. (028)79.655412

ALL DIMENSIONS IN MILLIMETERS UNLESS OTHERWISE STATED
DO NOT SCALE
THIS DRAWING IS CONFIDENTIAL AND IS THE PROPERTY OF S.D.C. TRAILERS LTD. IT IS NOT COPIED OR SHOWN TO OTHERS WITHOUT THE WRITTEN PERMISSION OF S.D.C. TRAILERS LIMITED

DRAWN	CHECKED	SCALE: NTS
R_MC_COLGAN		TITLE: TOP LEVEL ASSY - 145388
DATE: 27/01/2016	DATE	
DRAWING SIZE: A1	DRAWING NUMBER: 3GA-1539	Rev. 0